Service unit

Filter + lubricator, »SYNTESI« series

PLUS

Art. No. **145408**

Type No. **5625F10L105**

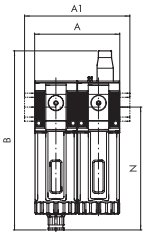

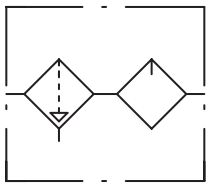

Exemplary illustration

Two-part service units consisting of filter and lubricator of the »SYNTESI« series. For all information on the relevant properties, please refer to the data sheets of the individual components.

Technical data

Series	Syntesi
Size	2
Max. input pressure	13 bar
Temperature range	-10 to 50 °C
Input	G 3/4
Output	G 3/4
Front and back port thread	G 1/4
Flow rate measurement 1	P_2 = 6.3 bar and pressure drop Δ_p = 0.5 bar
Flow rate 1	2900 Nl/min
Flow rate measurement 2	P_2 = 6.3 bar and pressure drop Δ_p = 1 bar
Flow rate 2	4400 Nl/min
Filter rating	5 µm
Condensate drain	RMSA semi-automatic
Output air purity class according to ISO 8573-1	3.7.-
Medium	Compressed air or other neutral gases
Housing	Technopolymer
Sealant	NBR
Bowl	Technopolymer
Sight dome	Brass
A	121.0 mm
A1	156,0 mm
B	208.0 mm
N	139.8 mm

RIEGLER & Co. KG
Schützenstraße 27
72574 Bad Urach
Tel. +49 7125 9497-642
technik@riegler.de

Subject to technical changes an errors reserved.
The proficiency testing is the responsibility of the user.
12.02.2024 The specified data do not represent legally guaranteed properties.

Commercial data

Customs tariff number	84248970
Country of origin	IT
eCl@ss 5.1.4	27292890
eCl@ss 9.0	27292890
UNSPSC_Code_v190501	27131614
UNSPSC_CodeDesc_v190501	Pneumatic lubricators

RIEGLER & Co. KG
Schützenstraße 27
72574 Bad Urach
Tel. +49 7125 9497-642
technik@riegler.de

Subject to technical changes an errors reserved.
The proficiency testing is the responsibility of the user.
12.02.2024 The specified data do not represent legally guaranteed properties.

FIL + LUB SYNTESi®

METAL WORK PNEUMATIC

For full details and list of components refer to the sections about filter and lubricator.

TECHNICAL DATA		FIL + LUB SY1			FIL + LUB SY2			
Threaded port		1/8"	1/4"	3/8"	3/8"	1/2"	3/4"	1"
Degree of filtration	µm	5 (yellow) - output air purity class ISO8573-1: 3.7.-						
		20 (white) - output air purity class ISO8573-1: 4.7.-						
		50 (blue) - output air purity class ISO8573-1: 5.7.-						
Max. inlet pressure	bar	15			13			
	MPa	1.5			1.3			
	psi	217			188			
Flow rate at 6.3 bar (0.63 MPa; 91 psi) ΔP 0.5 bar (0.05 MPa; 7 psi)	Nl/min	860			2900			
	scfm	30			102.5			
Flow rate at 6.3 bar (0.63 MPa; 91 psi) ΔP 1 bar (0.1 MPa; 14 psi)	Nl/min	1450			4400			
	scfm	51			156			
Min/max temperature at 10 bar; 1 MPa; 145 psi	°C	From -10 to +50			From -10 to +50			
Weight	g	349	344	355	840	813	809	797
Fluid		Compressed air or other inert gases						
Mounting position		Vertical			Vertical			
Additional air take-off, for pressure gauges or fittings		1/8", front and rear			1/4", front and rear			
Additional air take-off flow rate at 6.3 bar	Nl/min	500 - 450			1500 - 800			
(0.63 MPa; 91 psi) ΔP 1 bar (0.1 MPa; 14 psi)	scfm	18 - 16			53 - 28			
Filter bowl capacity (condensate)	cm^3	30			70			
Quantity of filled oil	cm^3	60			130			
Condensate drain		RMSA: drain with manual condensate discharge and automatic discharge at zero pressure						
		RA: automatic drain with condensate discharge, independent of pressure and flow rate.						
		Version conveys the draining by inserting the pipe having internal diameter 6 mm in the lower port.						
		SAC: automatic drain with condensate discharge. **Operates by pressure drop – requires variable air take-offs**.						
		Note: **the maximum input pressure for the RA version must not exceed 10 bar**						
Recommended oils		ISO and UNI FD22						
		(Energol HPL; Spinesso; Mobil DTE; Tellus oil)						
Wall fixing screws		No. 2 M4 screws			No. 2 M5 screws			

RIEGLER & Co. KG
Schützenstraße 27
72574 Bad Urach
Tel. +49 7125 9497-642
technik@riegler.de

Subject to technical changes an errors reserved.
The proficiency testing is the responsibility of the user.
12.02.2024 The specified data do not represent legally guaranteed properties.

DIMENSIONS

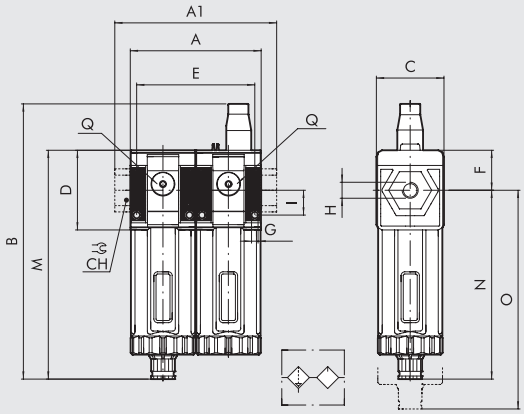

		SIZE 1			SIZE 2			
H (threaded port)		1/8"	1/4"	3/8"	3/8"	1/2"	3/4"	1"
A		84			121			
A1		-	-	86	-	-	156	156
B	RMSA	117.5			208			
	RA/SAC	121.5			212			
C		44			61			
CH		-			-	-	32	36
D		51.5			70.5			
E		75.3			108			
F		25.8			38.2			
G		Hole for M4 screws			Hole for M5 screws			
I		16			22.5			
M	RMSA	148			178			
	RA/SAC	152			182			
N	RMSA	122.2			139.8			
	RA/SAC	126.2			143.8			
O	RMSA	202			245			
	RA/SAC	206			249			
Q (no. 2 additional air takes-off)		1/8"			1/4"			

KEY TO CODES

56	1	1	F	10	L	10	1
SYNTESI	SIZE	THREADED INPUT CONNECTION	ELEMENT	DEGREE OF FILTRATION AND TYPE OF CONDENSATE DRAIN	ELEMENT	OIL FILLING	THREADED OUTPUT CONNECTION
56 Syntesi **5X** Syntesi anti-corrosion	**1** Size 1 **2** Size 2	**1** 1/8" port **2** 1/4" port **3** 3/8" port **3** 3/8" port **4** 1/2" port **5** 3/4" port **6** 1" port	**F** Filter	**10** 5 µm, RMSA **20** 20 µm, RMSA **30** 50 µm, RMSA **40** 5 µm, RA **50** 20 µm, RA **60** 50 µm, RA **11** 5 µm, SAC **21** 20 µm, SAC **31** 50 µm, SAC	**L** Lubricator	**10** Manual filling from the top	**1** 1/8" port **2** 1/4" port **3** 3/8" port **3** 3/8" port **4** 1/2" port **5** 3/4" port **6** 1" port

RMSA: drain with manual condensate discharge and automatic discharge at zero pressure.
RA: automatic drain with condensate discharge, independent of pressure and flow rate. Version conveys the draining by inserting the pipe having internal diameter 6 mm in the lower port.
SAC: automatic drain with condensate discharge. **Operates by pressure drop – requires variable air take-offs**.

PURCHASE ORDER CODES HAVING A MORE FREQUENT USE

N.B. Besides the below mentioned codes, you can order elements composed at your will according to the key to codes.

Code	Description	Code	Description	NOTE
FIL + LUB Syntesi® SY1		**FIL + LUB Syntesi® SY2**		**Anti-corrosion version**
5611F20L101	FIL+LUB SY1 1/8 20 RMSA	**5623F20L103**	FIL+LUB SY2 3/8 20 RMSA	**5X**_ _ _ _ _ _
5611F50L101	FIL+LUB SY1 1/8 20 RA	**5623F50L103**	FIL+LUB SY2 3/8 20 RA	**Example**
				5X11F50L101 FIL+LUB SY1 1/8 20 RA anti-corrosion
5612F20L102	FIL+LUB SY1 1/4 20 RMSA	**5624F20L104**	FIL+LUB SY2 1/2 20 RMSA	
5612F50L102	FIL+LUB SY1 1/4 20 RA	**5624F50L104**	FIL+LUB SY2 1/2 20 RA	
5613F20L103	FIL+LUB SY1 3/8 20 RMSA	**5625F20L105**	FIL+LUB SY2 3/4 20 RMSA	
5613F50L103	FIL+LUB SY1 3/8 20 RA	**5625F50L105**	FIL+LUB SY2 3/4 20 RA	
		5626F20L106	FIL+LUB SY2 1 20 RMSA	
		5626F50L106	FIL+LUB SY2 1 20 RA	

RIEGLER & Co. KG
Schützenstraße 27
72574 Bad Urach
Tel. +49 7125 9497-642
technik@riegler.de

Subject to technical changes an errors reserved.
The proficiency testing is the responsibility of the user.
12.02.2024 The specified data do not represent legally guaranteed properties.

GENERAL TECHNICAL DATA SYNTESi®

Syntesi® is an important milestone achieved by Metal Work, the result of thirty years' experience producing air-treatment units. It has been studied in minute detail to obtain the best possible performance in a reduced space and with limited weight. The capacity is much higher than that of other units of the same size.
This modular unit features a very simple yet effective system that requires no brackets, stay bolts or yoke for assembling the elements.
The basic version of Syntesi® incorporates numerous functions that are not provided or are only optional with traditional units. Examples are padlockable knobs, additional pneumatic ports on the front and back, flow options from left to right or vice versa, regulators with compensation system - which are accurate even when the upstream pressure changes, with rapid downstream pressure relief - full indelible marking, automatic condensate drain even in size 1, and 360° visual inspection of oil and condensate levels. The basic materials, technopolymer and nickel-plated brass have excellent corrosion resistance. An anti-corrosion version is available with stainless steel components (screws, plates) or Geomet®-reated ones (regulator springs).

TECHNICAL DATA		SIZE 1			SIZE 2			
Threaded port		1/8"	1/4"	3/8"	3/8"	1/2"	3/4"	1"
Max. input pressure	bar	15			13			
	MPa	1.5			1.3			
	psi	217			188			
Flow rate		See catalogue of the various elements						
Min/max temperature at 10 bar; 1 MPa; 145 psi	°C	from -10 to +50			from -10 to +50			
Padlockable knob		The knobs of the regulators, filter regulators and standard sectioning valves can all be padlocked						
Fluid		Compressed air or other inert gases						
Mounting position		See catalogue of the various elements						
Direction of flow		Flow options right to left or vice versa						
Additional air take-off, for pressure gauges or fittings		1/8", front and rear, on all modules			1/4", front and rear, on all modules			
Wall fixing screws		No. 2 M4 screws			No. 2 M5 screws			
Certification for potentially explosive atmosphere according to Atex 2014/34/EU rule		Ex II 3G Ex h IIC T5 Gc -10°C < Ta < 50°C II 3D Ex h IIIC T100 °C Dc						

ANTI-CORROSION VERSION

Differences compared to the standard version:
- stainless steel screws
- stainless steel plate for R, FR, V3V knobs
- Geomet®-treated regulator spring and filter-regulator

RIEGLER & Co. KG
Schützenstraße 27
72574 Bad Urach
Tel. +49 7125 9497-642
technik@riegler.de

Subject to technical changes an errors reserved.
The proficiency testing is the responsibility of the user.
12.02.2024 The specified data do not represent legally guaranteed properties.

FIXING TO FRONT PORTS

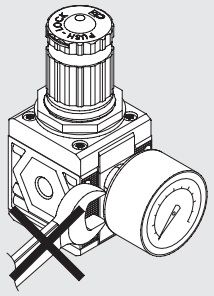

Do not use a spanner for fixing taper threaded elements to the front ports. Mount by hand and apply a liquid sealant (not teflon®).

ROTARY BUSHINGS

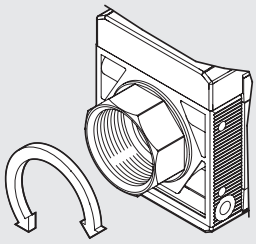

3/4″ and 1″ bushings in Size 2 rotate freely to facilitate assembly operations.

LASER MARKING

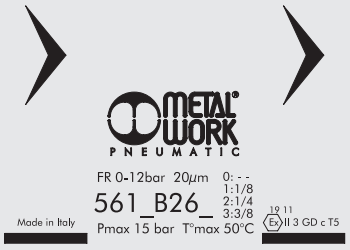

The following is marked indelibly on the body:
- Metal Work trademark
- Code
- Maximum pressure and temperature
- Degree of filtration or pressure range, where relevant
- Week and year of manufacture
- Atex category
- Made in Italy

MOUNTING OPTIONS

On the wall, using two screws

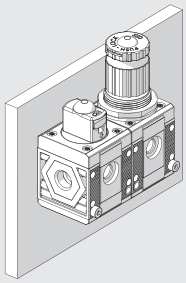

On a panel

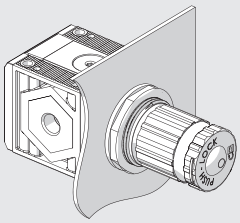

Using knob bracket

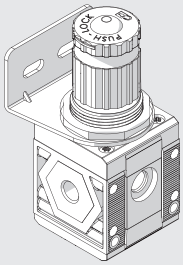

Using a bracket

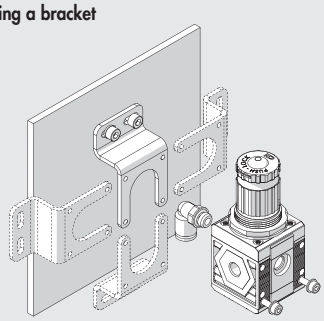

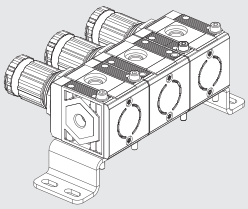

The bracket can be secured in any position, and the fittings can be mounted on the pressure gauge air intake at the back of the unit.

On a DIN EN50022 bar with the apposite adaptator

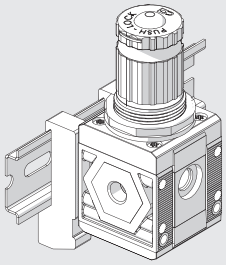

RIEGLER & Co. KG
Schützenstraße 27
72574 Bad Urach
Tel. +49 7125 9497-642
technik@riegler.de

Subject to technical changes an errors reserved.
The proficiency testing is the responsibility of the user.
12.02.2024 The specified data do not represent legally guaranteed properties.

MODULARITY AND FLEXIBILITY

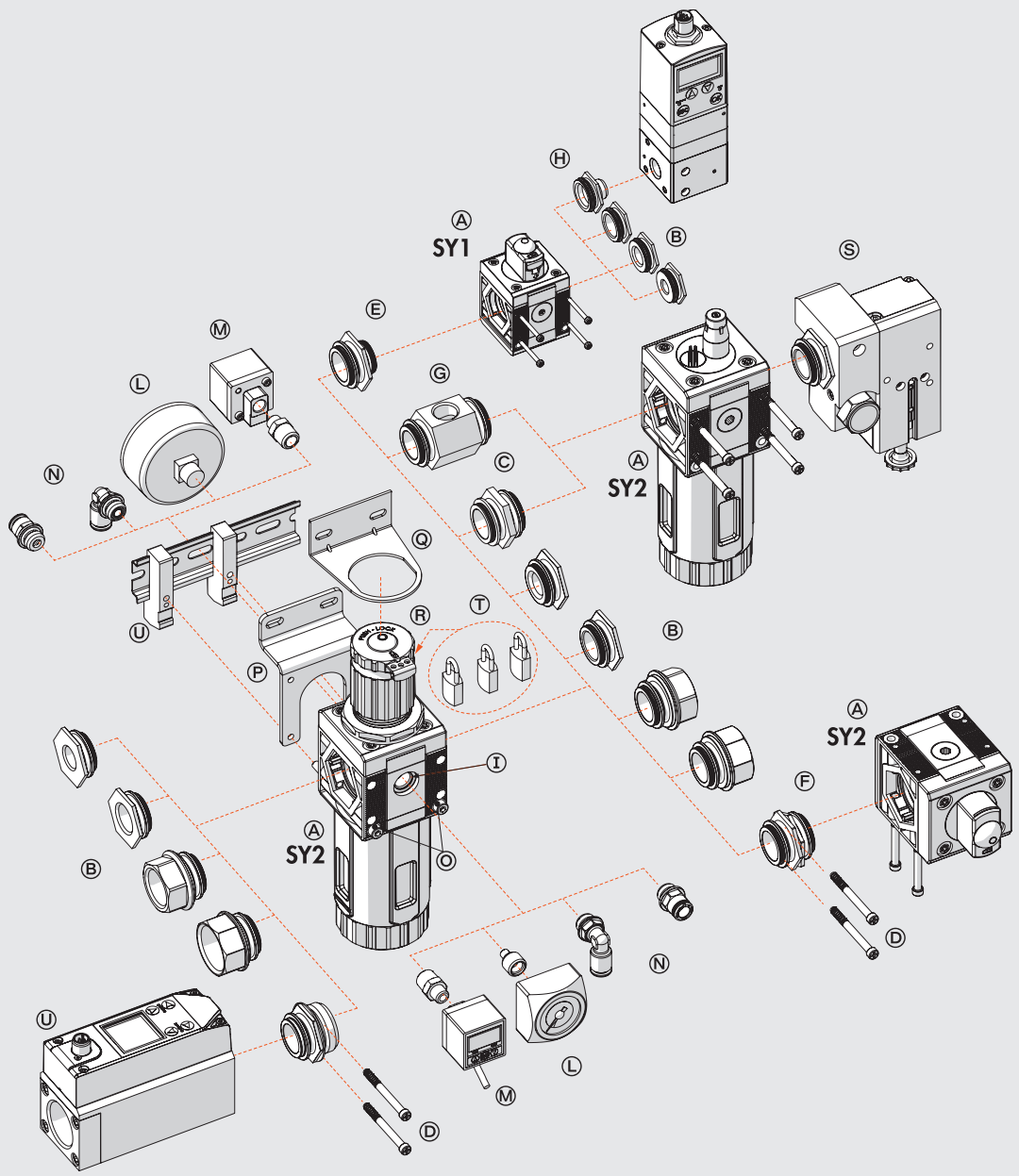

RIEGLER & Co. KG
Schützenstraße 27
72574 Bad Urach
Tel. +49 7125 9497-642
technik@riegler.de

Subject to technical changes an errors reserved.
The proficiency testing is the responsibility of the user.
12.02.2024 The specified data do not represent legally guaranteed properties.

The various elements of Syntesi® Ⓐ can be connected to the air feed and delivery circuit using pneumatic nickel brass or passivated aluminium ports Ⓑ and can be fixed together using nipples Ⓒ.
The nipples and ports are easy to remove by unscrewing the two front screws Ⓓ. This solution has numerous advantages:
- Reduced overall dimensions.
- Free composition of multiple elements, without the need for brackets, stay bolts or yoke.
- The threads for the fittings are metallic, allowing high tightening torques, also for tapered threads.
- Maximum flexibility: a unit can be transformed at any time by adding an element or replacing a port with another one, e.g. 1/4" instead of 1/8".
- The air intake port can be the same or different from the outlet port, as desired.

Standard Syntesi® ports are: 1/8", 1/4", 3/8" for size 1; 3/8", 1/2", 3/4", 1" for size 2.
It may be necessary to use a vice to insert the bushes into size 2.
The nipples have different functions:
- Nipple Ⓒ joins two elements of the same size together.
- Size adaptor Ⓔ can be used to connect an element in the Syntesi® 2 series with one in the Syntesi® 1 series.
- The 90° adaptor Ⓕ can be used to connect two 90° angled elements. For example, it can help directing the regulator knob or the control knob of a sectioning valve towards the user.
- The two-way air intake Ⓖ is a simple and cost-effective system which, besides connecting two elements together, has 2 opposing threaded air intakes.
- The adaptor for Regtronic Ⓗ can be used to fix the Regtronic 1/4" proportional valve to a Syntesi® size 1 element.

Additional ports Ⓘ. On the front and back of ALL Syntesi® elements there is a port (1/8" for size 1, 1/4" for size 2) that can be used for pressure gauges Ⓛ, pressure switches Ⓜ or, given the high flow rate, as additional air take-off Ⓝ. These ports are downstream of the element, so, for example, a regulator port can supply air at a set pressure or a filter port can supply filtered air (not valid for activated carbon filter and depurator).
Wall fixing. Only two through screws Ⓞ are needed. No bulky brackets or additional flanges are required. The bracket Ⓟ can be used to separate the unit from the fixing wall, e.g. to mount a fitting to the rear port.
Fixing on a DIN EN50022 bar. Can be done using the bracket kit Ⓤ.
Regulator fixing bracket Ⓠ. Regulators and filter-regulators can also be fixed using a steel bracket Ⓠ that embraces the bell.
Padlockable knob Ⓡ. The knobs of regulators, filter-regulator and sectioning valves can all be padlocked. The steel plate is included in the supply.
You can insert up to two 3 mm diameter padlocks Ⓣ on size 1 and three padlocks on size 2. As an alternative, the sectioning valve can have a steel plate suitable for a single 6 mm diameter padlock.
Safety valve Ⓢ. The unit can incorporate a series 70 SAFE AIR® safety valve.
Flowmeter series FLUX 1-2 Ⓤ. The unit can incorporate a series FLUX 1 or FLUX 2 flow meter.

RIEGLER & Co. KG
Schützenstraße 27
72574 Bad Urach
Tel. +49 7125 9497-642
technik@riegler.de

Subject to technical changes an errors reserved.
The proficiency testing is the responsibility of the user.
12.02.2024 The specified data do not represent legally guaranteed properties.

SYNTESI® KEY TO CODES

KEY TO CODES SINGLE ELEMENT

56	1	1	F	10	1
SYNTESI	**SIZE**	**THREADED INPUT CONNECTION**	**ELEMENT**	**TYPE**	**THREADED OUTPUT CONNECTION**
56 Syntesi **5X** Syntesi anti-corrosion	**1** Size 1 **2** Size 2	**0** Without bushing **1** 1/8″ port **2** 1/4″ port **3** 3/8″ port **0** Without bushing **3** 3/8″ port **4** 1/2″ port **5** 3/4″ port **6** 1″ port	**F** Filter **D** Depurator **C** Active carbon filter **R** Pressure regulator **B** Filter-regulator **L** Lubricator ● **V** Shut off valve ▲ **A** Progressive starter ▲ **S** Pressure switches **P** Air take-off	Varies from element to element	**0** Without bushing **1** 1/8″ port **2** 1/4″ port **3** 3/8″ port **0** Without bushing **3** 3/8″ port **4** 1/2″ port **5** 3/4″ port **6** 1″ port

● The anti-corrosion version of this element is only available with manual actuation.
▲ Not available in the anti-corrosion version.

KEY TO CODES UNIT COMPOSED OF TWO OR THREE ELEMENTS

56	1	1	V	10	B	24	L	10	1
SYNTESI	**SIZE**	**THREADED INPUT CONNECTION**	**ELEMENT 1**	**TYPE**	**ELEMENT 2**	**TYPE**	**ELEMENT 3**	**TYPE**	**THREADED OUTPUT CONNECTION**
56 Syntesi **5X** Syntesi anti-corrosion	**1** Size 1 **2** Size 2	**1** 1/8″ port **2** 1/4″ port **3** 3/8″ port **3** 3/8″ port **4** 1/2″ port **5** 3/4″ port **6** 1″ port	**F** Filter **D** Depurator **C** Active carbon filter **R** Pressure regulator **B** Filter-regulator **L** Lubricator ● **V** Shut off valve ▲ **A** Progressive starter ▲ **S** Pressure switches **P** Air Take-off	Varies from element to element	**F** Filter **D** Depurator **C** Active carbon filter **R** Pressure regulator **B** Filter-regulator **L** Lubricator ● **V** Shut off valve ▲ **A** Progressive starter ▲ **S** Pressure switches **P** Air Take-off	Varies from element to element	**F** Filter **D** Depurator **C** Active carbon filter **R** Pressure regulator **B** Filter-regulator **L** Lubricator ● **V** Shut off valve ▲ **A** Progressive starter ▲ **S** Pressure switches **P** Air Take-of	Varies from element to element	**1** 1/8″ port **2** 1/4″ port **3** 3/8″ port **3** 3/8″ port **4** 1/2″ port **5** 3/4″ port **6** 1″ port

● The anti-corrosion version of this element is only available with manual actuation.
▲ Not available in the anti-corrosion version.

RIEGLER & Co. KG
Schützenstraße 27
72574 Bad Urach
Tel. +49 7125 9497-642
technik@riegler.de

Subject to technical changes an errors reserved.
The proficiency testing is the responsibility of the user.
12.02.2024 The specified data do not represent legally guaranteed properties.

Accessories

	Art. No.	Type No.
Bowl, size 2, RA fully automated	145615	9210106
Bowl, size 2, SAC fully automated	145616	9210107
Filter element, size 2, 20 µm	145623	9210156
Filter element, size 2, 50 µm	145624	9210157
Mounting bracket, size 2, standard and anti-corr.	145659	9200717X
Adapter for DIN rail, size 1 and size 2	145660	9200718X
Connecting nipple kit, size 2	144696	9210010
Connecting element 90°,, size 2	145503	9210019
Size adapter, size 1 - size 2, incl. 4 screws	145504	9210006
Assembly key for bowl, size 2	145506	9210050
Fastening screw, size 2	145508	9210031

Spareparts

	Art. No.	Type No.
Bowl, size 2, RMSA semi-automated	145614	9210105
Bowl for lubricator, size 2, PA12	145618	9210115
Filter element, size 2, 5 µm	145622	9210155
Lubricator dome (drip cap), s2, w. oil filling cap	145630	9210185
Oil filling cap, size 2	145632	9210186
Threaded port bushing, size 2, G 3/4	144693	9210013

RIEGLER & Co. KG
Schützenstraße 27
72574 Bad Urach
Tel. +49 7125 9497-642
technik@riegler.de

Subject to technical changes an errors reserved.
The proficiency testing is the responsibility of the user.
12.02.2024 The specified data do not represent legally guaranteed properties.